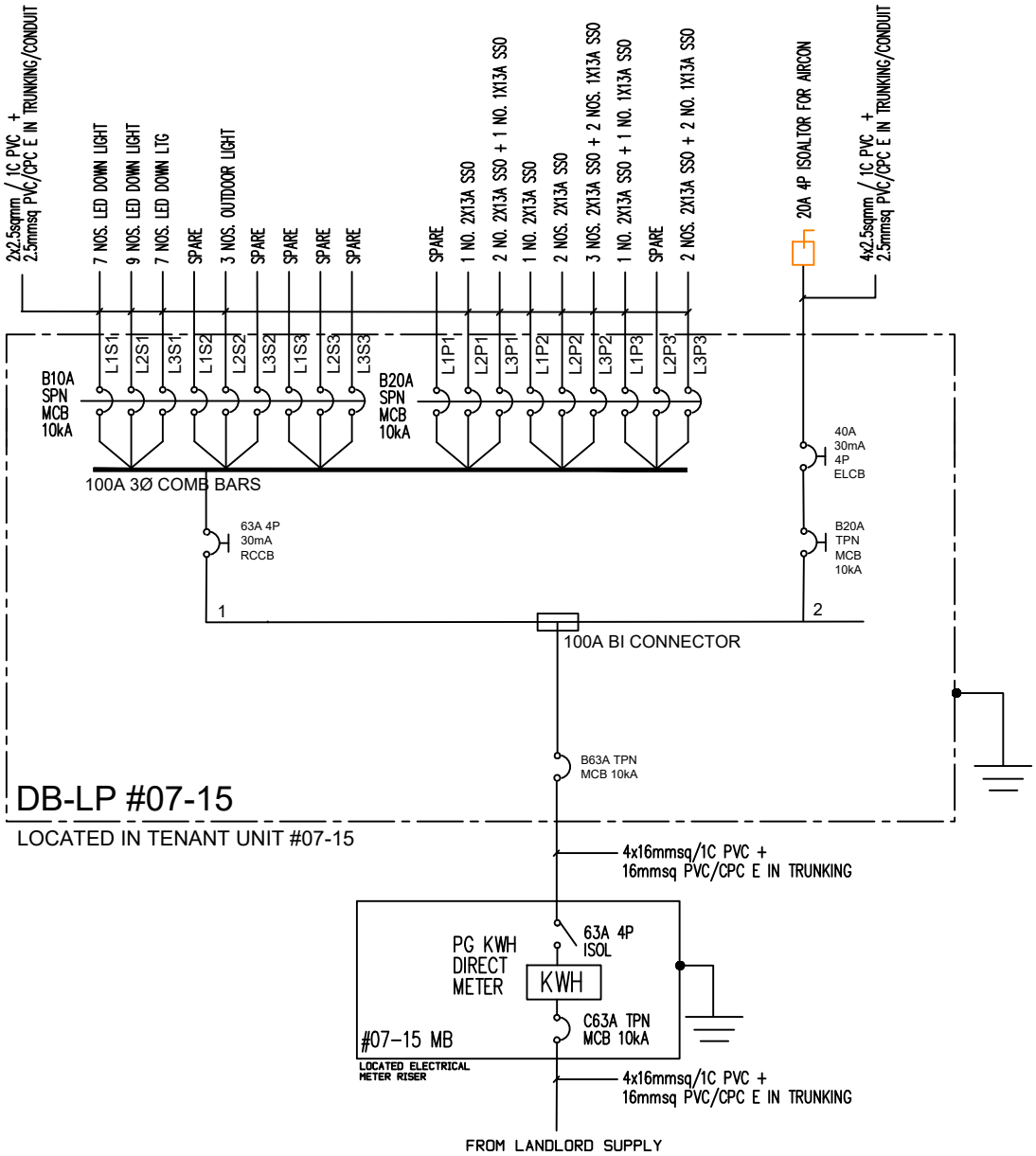

LEGEND

- BI CONNECTOR
- EARTHING
- ISOLATOR
- EARTH LEAKAGE CIRCUIT BREAKER
- CIRCUIT BREAKER

EMA LICENSED ELECTRICAL WORKER
ELECTRICAL
SEOW SWEE LEONG
8/25825
SINGAPORE

CLIENT / ADDRESS :	MAIN CONTRACTOR :	ELECTRICAL CONTRACTOR :	DRAWING TITLE :	LEW :	CHECKED :	DATE :
11 WOODLAND CLOSE #07-15 SINGAPORE 737853	STUDIO J INTERIOR	H-CUBE GROUP PTE LTD	SINGLE LINE DIAGRAM (SLD)	SEOW SWEE LEONG EMA Licence No. : 8/25825		15 JUNE 2025
					DRAWING NO. : SJI-HCG-WDC-SLD	REV : 0